GEL MATIC

**MODEL:** BC 150
**CONDENSATION:** AIR

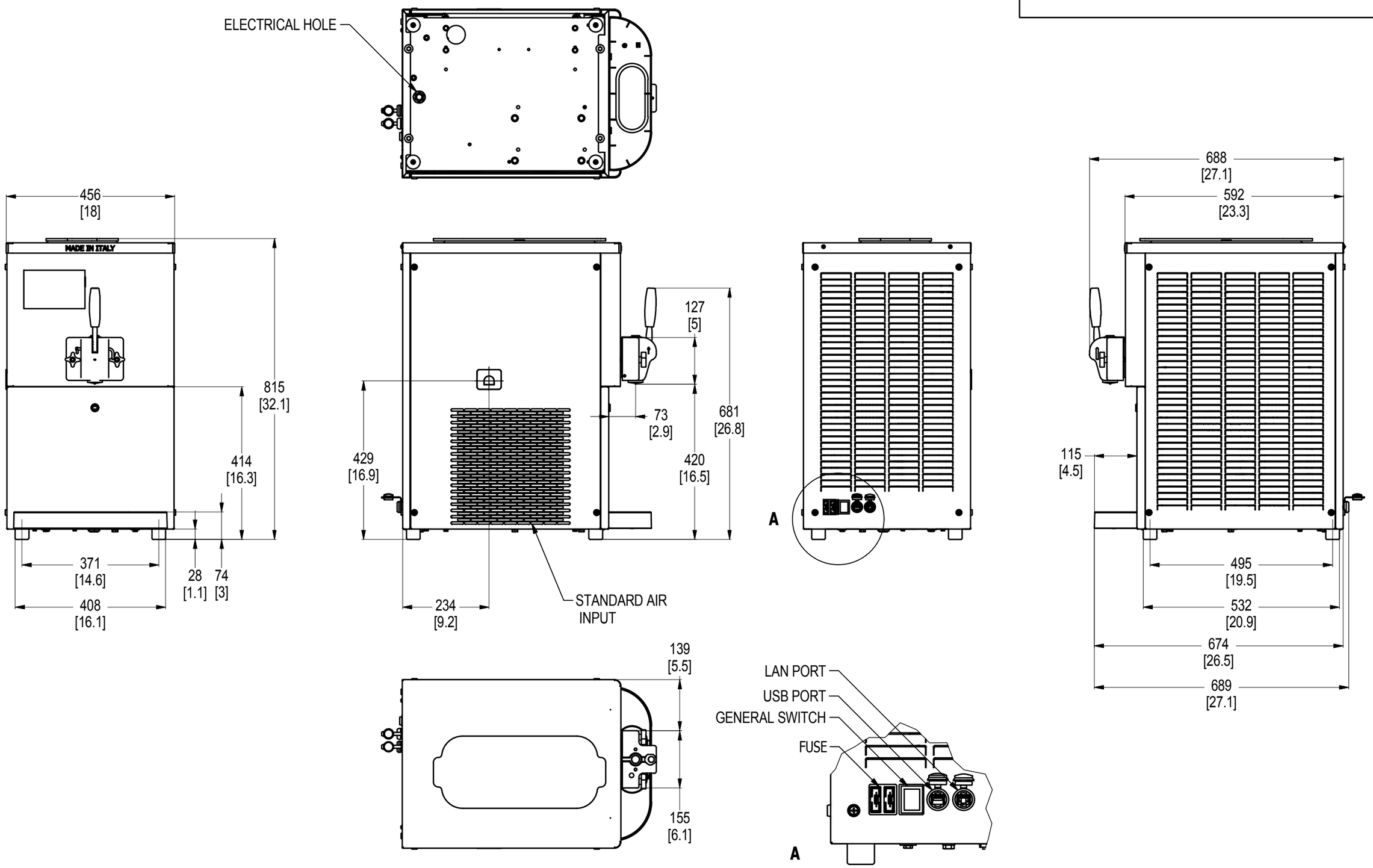


**Gel Matic Italia S.r.l. -** Via Zanica 6C 24050 Grassobbio (BG) - +39.035.525138 - info@gelmatic.com - www.gelmatic.com