GEL MATIC

MODEL: MC 153
CONDENSATION: AIR

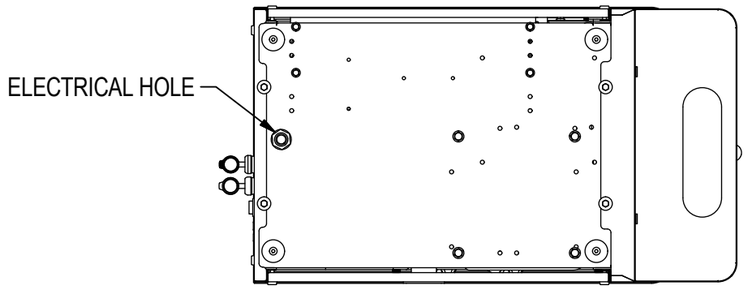

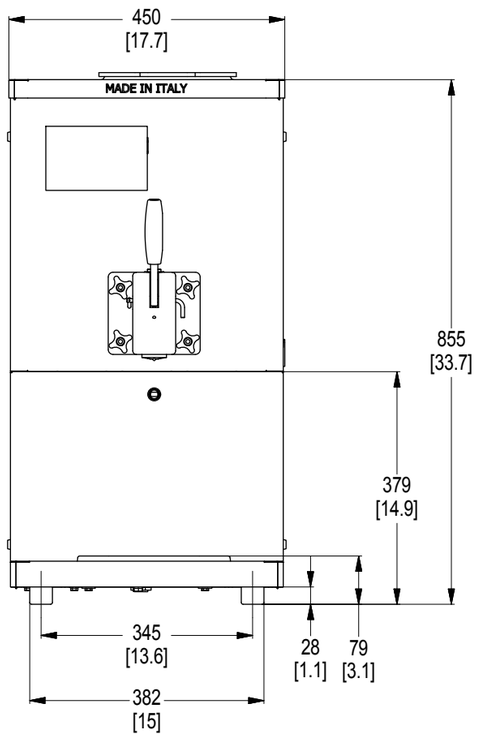

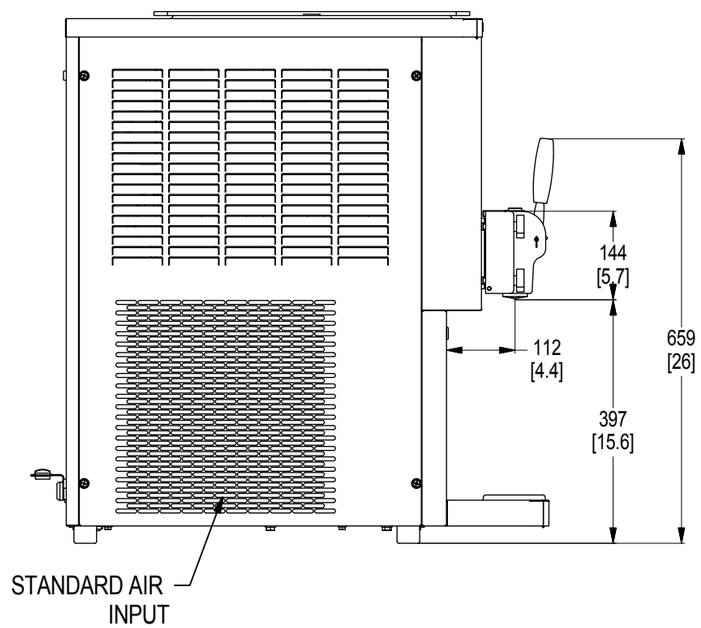

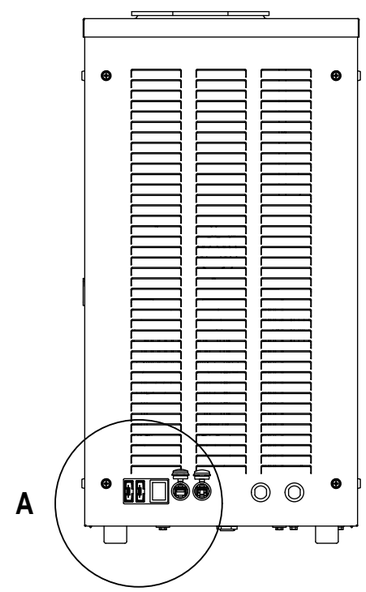

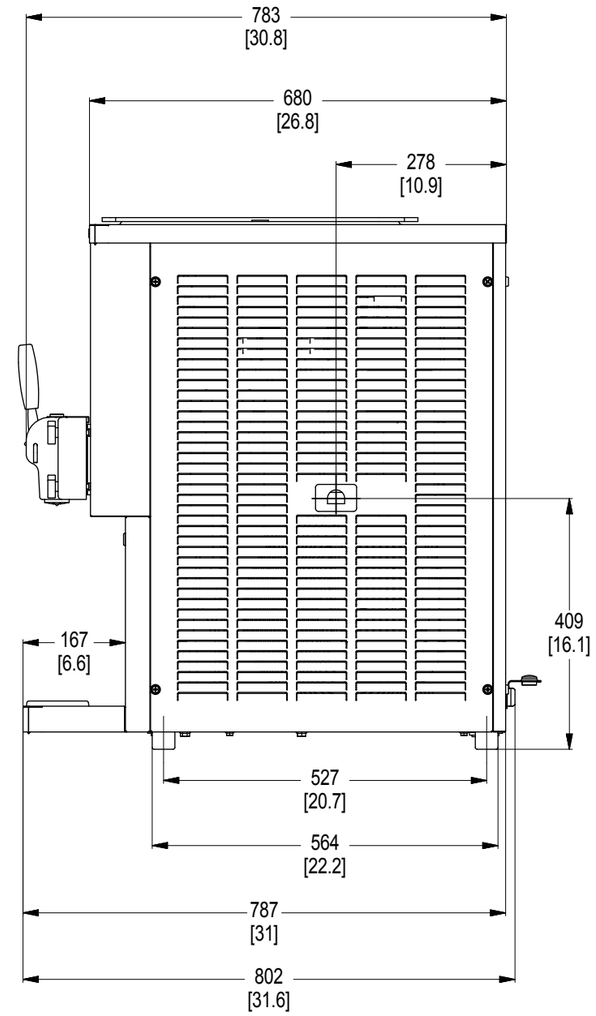

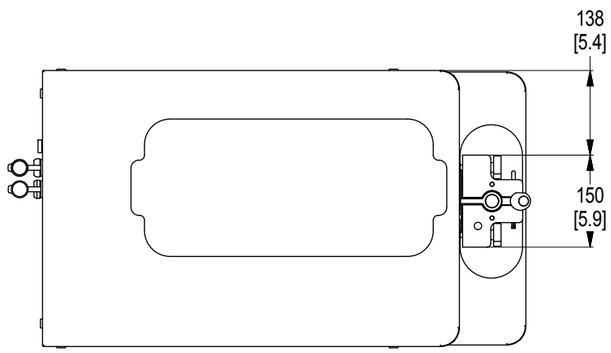

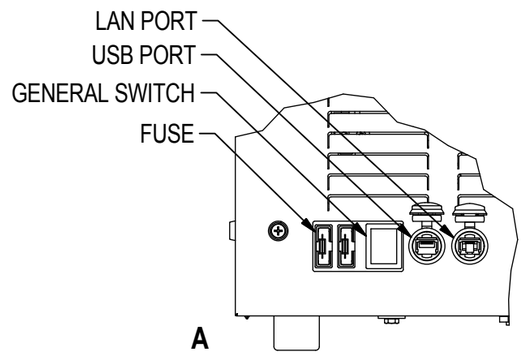

Gel Matic Italia S.r.l. - Via Zanica 6C 24050 Grassobbio (BG) - +39.035.525138 - info@gelmatic.com - www.gelmatic.com